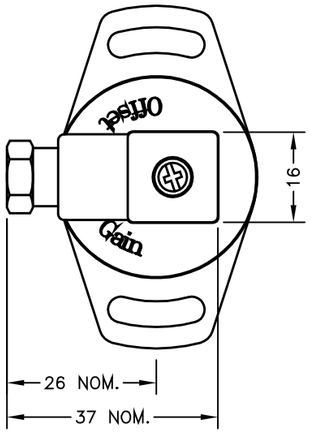

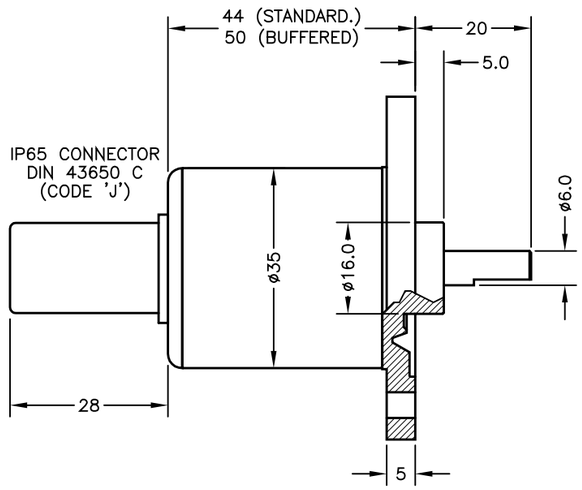

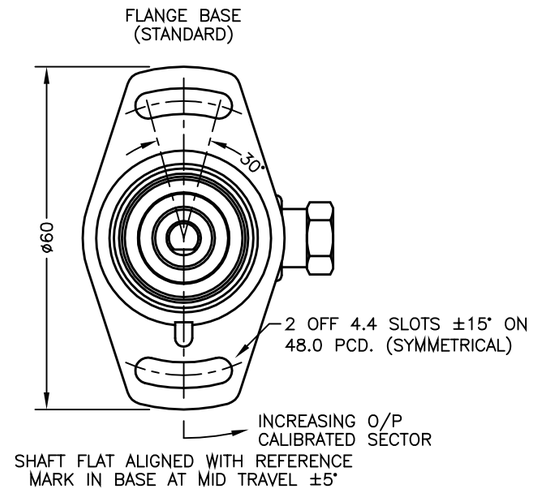

ELECTRICAL OPTIONS/ SPECIFICATIONS

OUTPUT OPTION	OUTPUT	SUPPLY	
A	0.5 TO 4.5V RATIOMETRIC	5V	STANDARD
B	±5V	±15V	BUFFERED
C	0.5 TO 9.5V	24V	BUFFERED
D	±10V	±15V	BUFFERED
G	0.5 TO 4.5V	24V	BUFFERED
	SUPPLY CURRENT 12mA TYP. 20mA MAX.		BUFFERED
E	4 TO 20mA 2–WIRE	24V	BUFFERED
F	4 TO 20mA 3–WIRE SINK	24V	BUFFERED
H	4 TO 20mA 3–WIRE SOURCE	24V	BUFFERED

SINK VERSION OUTPUT COMPLIANCE 5–28V
SOURCE VERSION DRIVE 300Ω MAX TO 0V

CABLE LENGTH, OPTIONS 'Lxx' OR 'Mxx', ORDERED IN cm,
50cm STANDARD OR AS REQUIRED.
3–CORE SCREENED: 0.2mm², ø4mm PUR JACKET
4–CORE SCREENED: 0.2mm², ø4.6mm PUR JACKET
CABLE/CONNECTOR CONNECTIONS*;

3 CORE	4 CORE	CONNECTOR	
RED	RED	:1	+Ve
BLACK	GREEN	:3	0V
	YELLOW	:4	–Ve – OPTIONS: B OR D
WHITE	BLUE	:2	OUTPUT
SCREEN	SCREEN	:4	BODY – OPTIONS: A, C, E–H

*CONNECTORS; MAXIMUM CONDUCTOR CROSS SECTION 0.75mm²

RANGE OF DISPLACEMENT FROM 20° TO 160°,
IN INCREMENTS OF 1°.

BODY MATERIAL:– STAINLESS STEEL.
FLANGE BASE MATERIAL:– ALUMINIUM.
SERVO MOUNT MATERIAL:– ALUMINIUM.

FURTHER OPTIONS:

SPRING RETURN (CODE 'N') AVAILABLE UP TO ±50°
CALIBRATED OUTPUT, PHYSICAL STOPS ±55°
NOTE STANDARD DEVICE HAS NO STOPS.

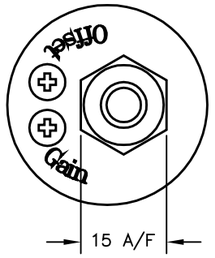

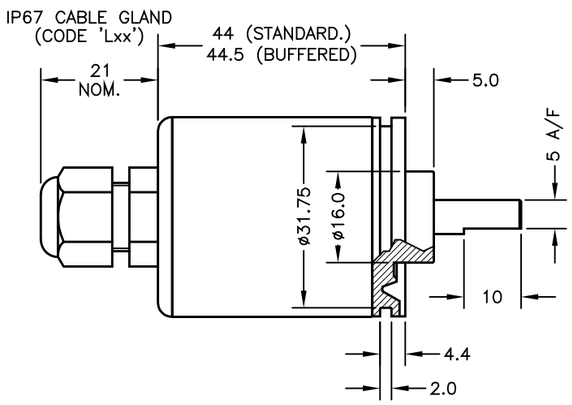

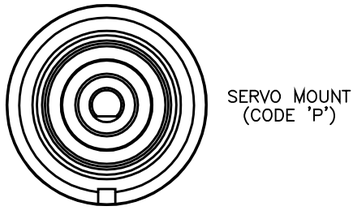

GAIN AND OFFSET ADJUSTMENTS
SEALED (CODE 'Y')

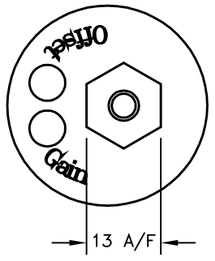

IP67 SHORT CABLE GLAND
– AXIAL (CODE 'Mxx')

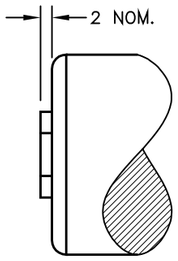

N	ELEC. OPTIONS AMENDED.	PDM
O	FLANGE TH'KNESS ADDED.	PDM
P	ADDITIONAL DIMS/VIEWS ADDED.	PDM

DRAWINGS NOT TO BE CHANGED WITHOUT REFERENCE TO THE CHANGE PROCEDURE.
CHANGES TO PARTS USED IN INTRINSICALLY SAFE PRODUCT MUST BE APPROVED
BY THE AUTHORISED PERSON
THIS IS AN UNCONTROLLED PRINT AND WILL NOT BE UPDATED.

POSITEK LIMITED

N	18/10/06	CHECKED BY RDS	X ±0.4 X.X ±0.2 X.XX ±0.1 DIMS mm
O	05/01/10		
P	06/07/11		
		DESCRIPTION P500 RIPS ROTARY SENSOR	
SCALE 10mm		DRAWING NUMBER P500-11	REV P
			SHEET 1 OF 1